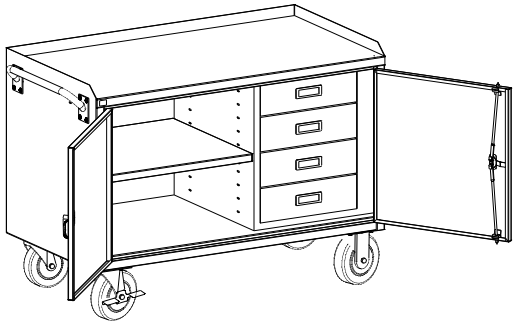

MODEL 253756
253752
253754

GLOBAL

www.globalindustrial.com
1-800-645-2986

ROLLING CART

ASSEMBLY INSTRUCTION

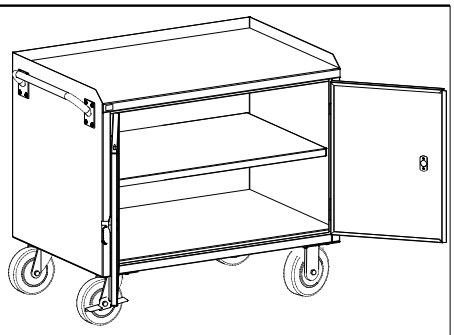

MODEL 253755
253753

CONTENTS

REF.	QTY.	DESCRIPTION
1	1	CABINET
2	1	HANDLE
3	1	SHELF
H1	2	rigid caster
H2	2	locking swivel caster
H3	16	plain washer
H4	16	M10 x 1.5 x 24.5mm hex head bolt
H5	8	M6 x 1 x 16mm phlllps pan head screw
H6	4	shelf clip
H7	1	left handle
H8	2	backing plate
H9	4	split washer
H10	4	M5 x .08 x 8MM phillips pan head screw
H11	2	rod guide
H12	1	right handle
H13	2	push rod
H14	1	latch
H15	1	holder
H16	1	cotter pijn

1

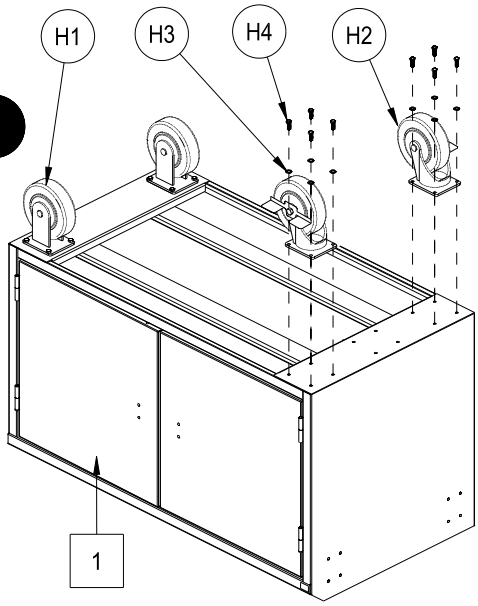

2

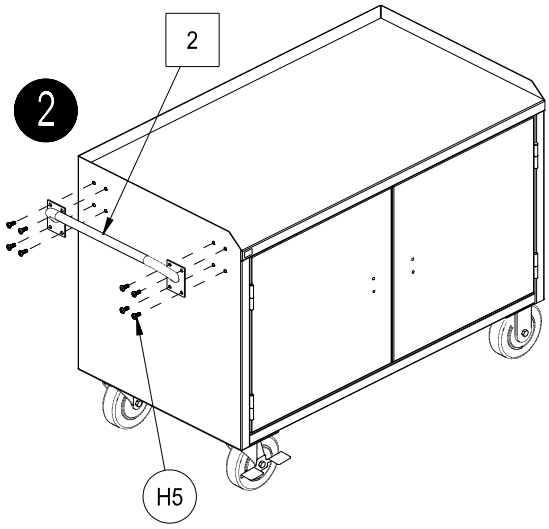

SEE RIGHT DOOR LOCK ASSEMBLY DETAIL

3

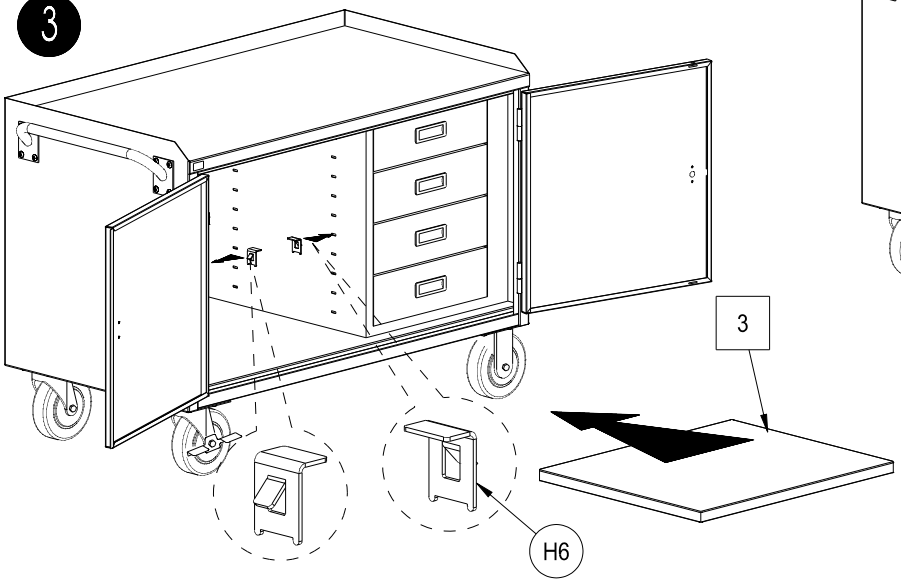

4

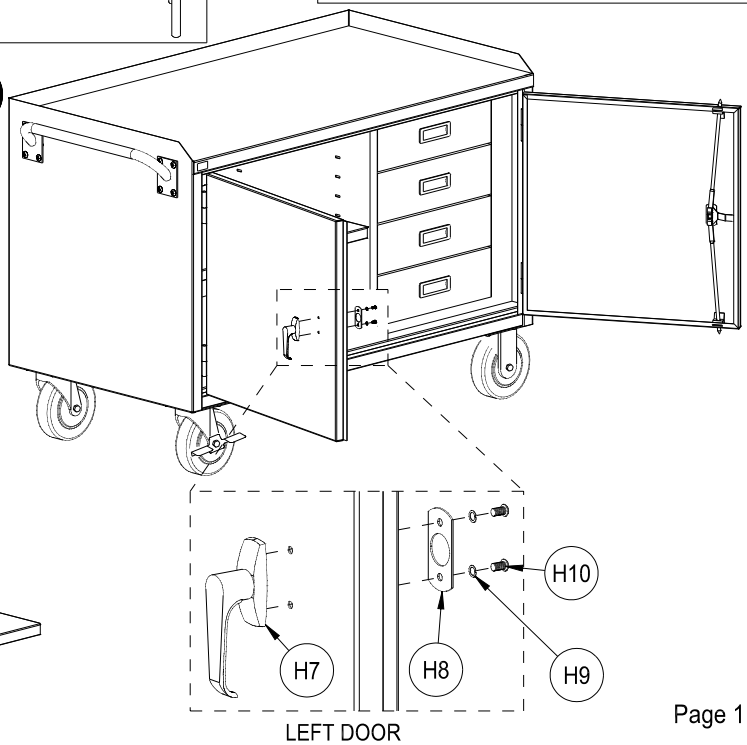

RIGHT DOOR LOCK ASSEMBLY

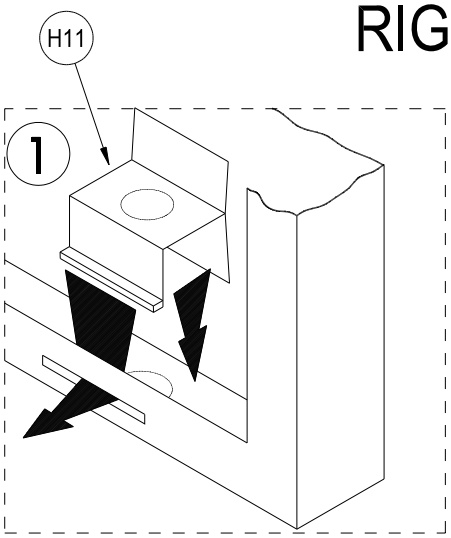

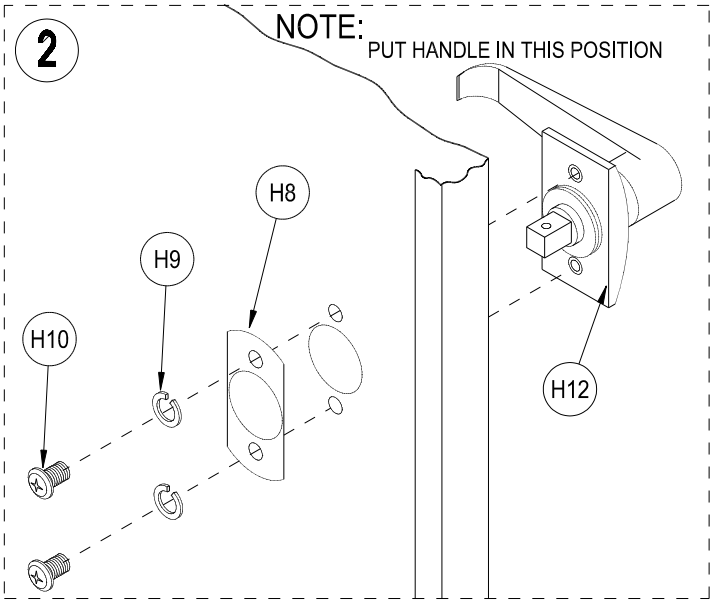

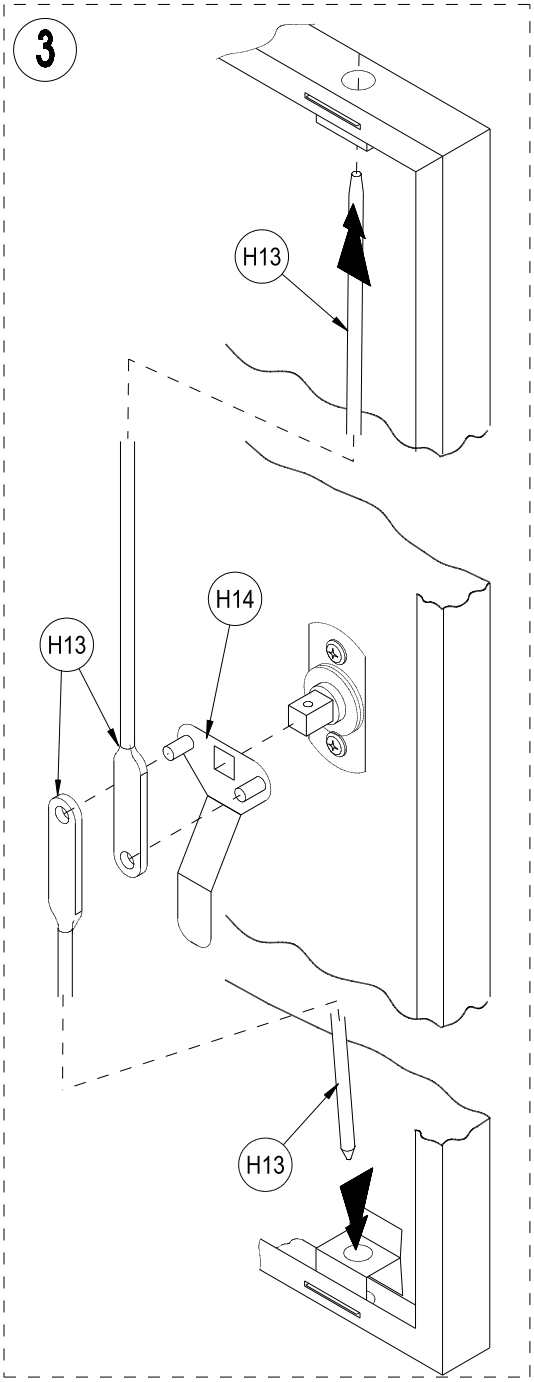

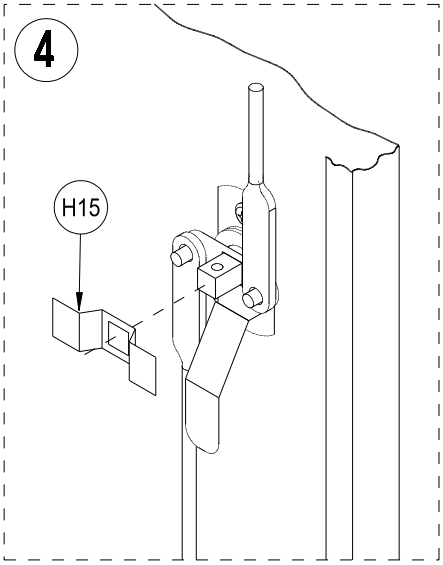

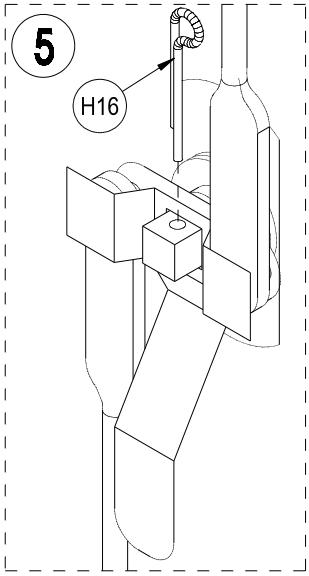

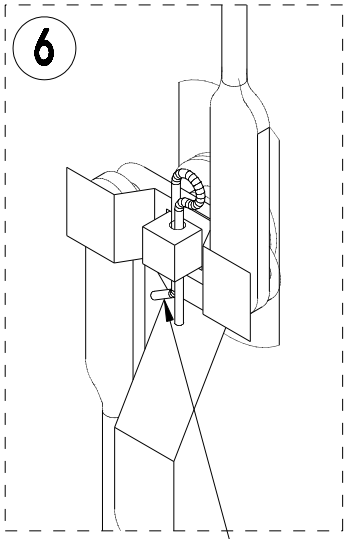

BEND 1 LEG OF
COTTER PIN WITH PLIERS.

www.globalindustrial.com
1-800-645-2986

OPTIONAL FLOOR LOCK
Model 253761

ASSEMBLY INSTRUCTION

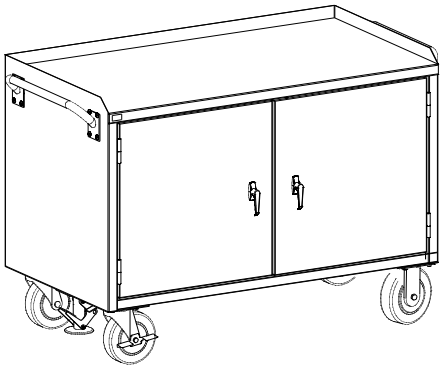

CONTENTS		
REF.	QTY.	DESCRIPTION
1	1	
H1	4	split washer
H2	4	3/8-16 hex head bolt

1

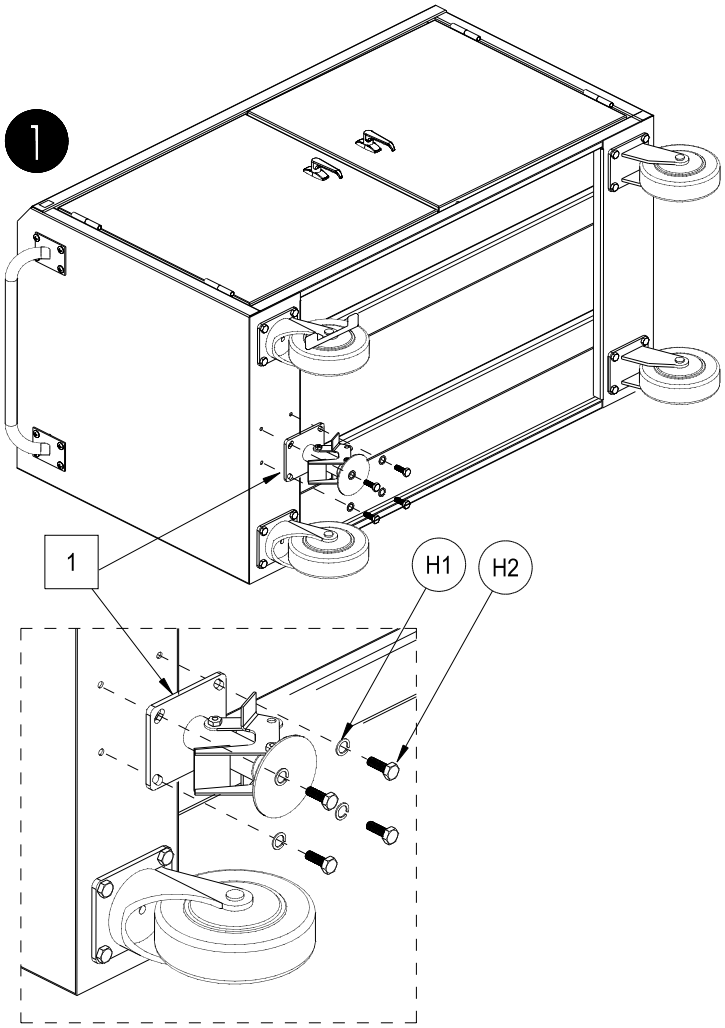

2

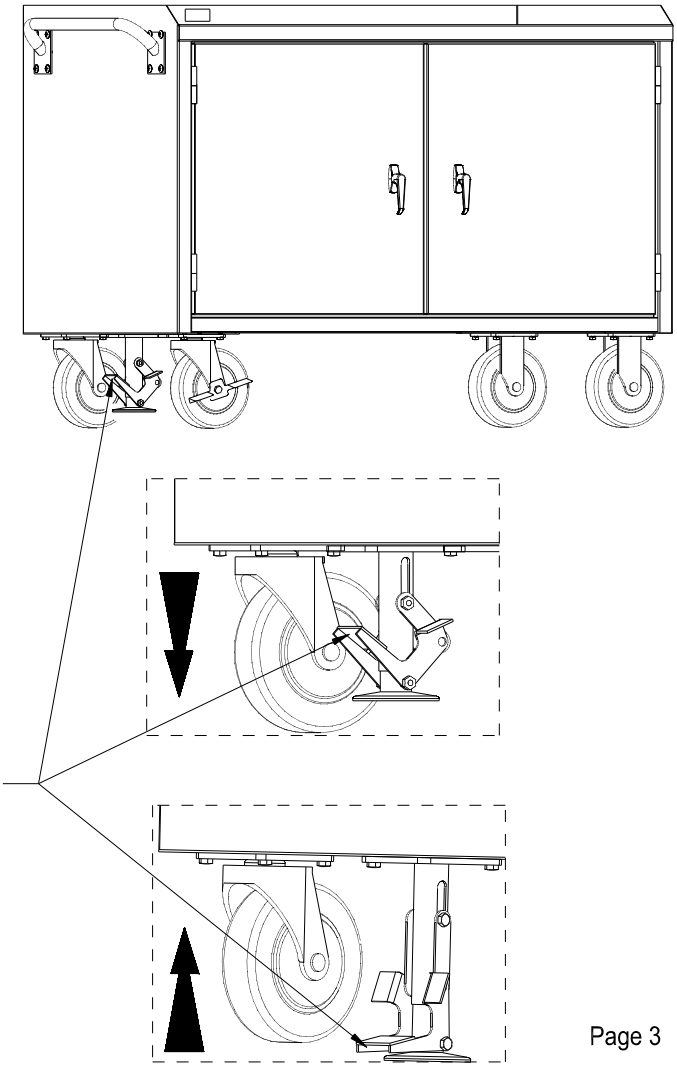

To raise Cart push down on lever.
To lower Cart pull up on lever.