MODEL:

DMCS60100XX

Heavy-Duty Mobile Flat-Panel Floor Stand for 60" - 100" Displays

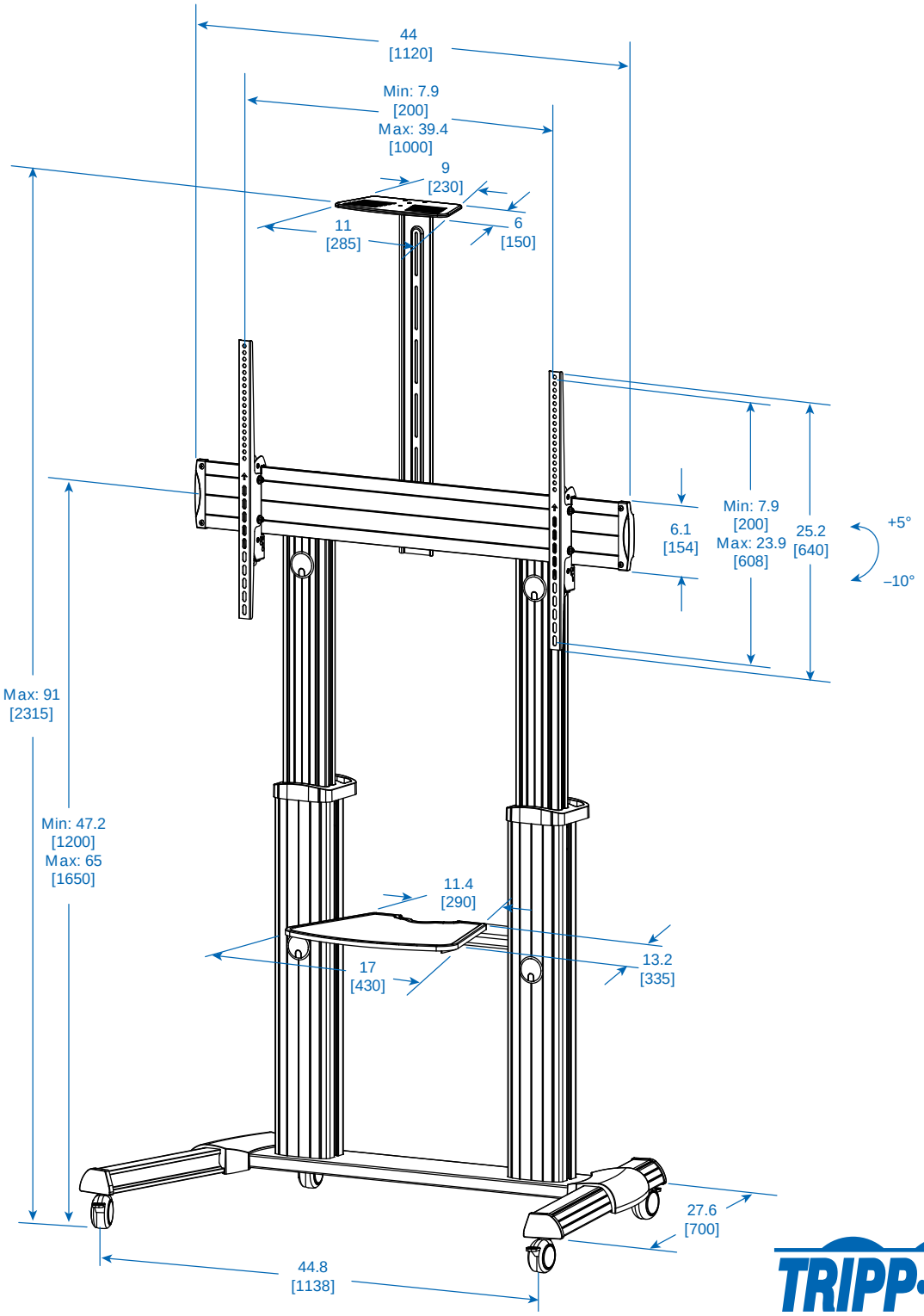

1111 W. 35th Street
Chicago, IL 60609 USA
773.869.1234
www.tripplite.com

Dimensions: INCHES [mm]

Tripp Lite has a policy of continuous improvement. Specifications are subject to change without notice.

18-05-190